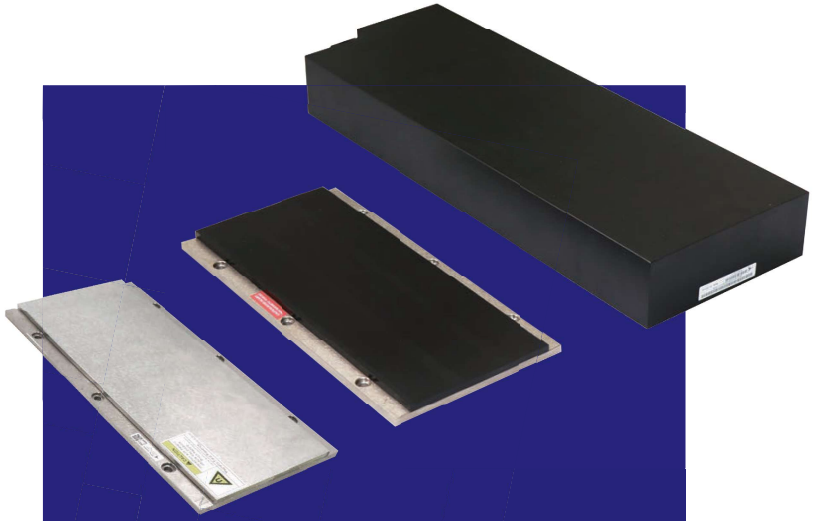

AKM SERIES

- Ironless technology
- Low cogging force
- Integrated with hall sensors
- High force and stiffness

Introduction

Iron Core AKM series linear motors provide the highest force for the smallest package size. This series also has a wide range of sizes and optional water-cooling configurations which are ideal for aggressive higher force and duty cycle applications.

Fcn (Continuous force) = 108.4N ~ 6190.1N

Fpk (Peak force) = 241.6N ~ 12884.3N

Features

- Iron core technology and low cogging force
- High continuous and peak force
- Optional hall sensors
- High motor constant
- Multiple coil lengths to select

Applications

Applicable to point-to-point micron meter level positioning; unlimited travel stroke with top speed of 5m/s or faster (stroke of 100m or longer).

Applications & Industries: high speed positioning systems for product handling in semiconductor, photovoltaic and lithium battery, glass and LCD applications, as well as machining centers, industrial printing machines, laser processing machines with demanding precision and motion control requirements.

	Series	Coil Length (mm)	● Continuous Force (Fcn) / ■ PeakForce (Fpk)[1] Unit: N						
			200	500	1000	2000	3500	5500	····
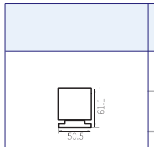	AKM30-B1	112	● 108.4 / ■ 241.6						
	AKM30-B2	196		● 216.8 / ■ 483.2					
	AKM30-B4	364			● 433.6 / ■ 966.3				
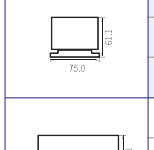	AKM50-B1	112	● 180.7 / ■ 402.6						
	AKM50-B2	196			● 361.3 / ■ 805.3				
	AKM50-B4	364				● 722.6 / ■ 1159.3			
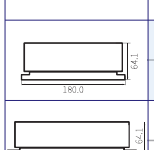	AKM100-B1	112			● 361.3 / ■ 805.3				
	AKM100-B2	196				● 722.6 / ■ 1159.3			
	AKM100-B4	364					● 1445.3 / ■ 3221.1		
	AKM150-B4	364					● 2027.0 / ■ 4831.6		
	AKM150-B8	700						● 3839.1 / ■ 9663.2	
	AKM200-B4	364					● 2539.6 / ■ 6442.2		
	AKM200-B8	700							● 4817.7 / ■ 12884.3

[1] Continuous force is measured under the condition of self-cooling. Please refer to the detail parameters table for the continuous force under the condition of water cooling.

AKM30-B1

AKM30-B1			
Performance Parameters	**Symbol**	**Unit**	**Series**
Continuous Force (NC) @100°C❶	F_{cn}	N	108.4
Peak Force	F_{pk}	N	241.6
Force Constant ±10%	K_f	N/Arms	23.0
Back EMF Constant ±10%	K_e	Vpeak/(m/s)	18.7
Motor Constant @25°C	K_m	N/Sqrt(W)	17.7
Resistance (L-L) 25°C ±10%❷	R_{25}	Ω	1.1
Inductance (L-L) ±30%❸	L	mH	21.0
Electrical Time Constant	τ_e	ms	18.8
Continuous Current (NC) @100°C❶	I_{cn}	Arms	4.8
Peak Current	I_{pk}	Arms	14.4
Continuous Power Dissipation (NC) @100°C❶	P_{cn}	W	49.9
Max. Coil Temperature	t_{max}	°C	100
Thermal Dissipation Constant (NC)❶	K_{thn}	W/°C	0.7
Max. Bus Voltage	U_{bus}	Vdc	600
Magnetic Period	τ_{NN}	mm	42
Attraction Force	F_a	kN	0.4
Mechanical Parameters			
Coil Mass (NC)	m_{cn}	kg	1.5
Coil Length (NC)	L_{cn}	mm	112
Track Mass Per Meter	m_{track}	kg	2.6
Other Information			
Insulation Class		Class B (130°C)	
Protection Grade		IP00	
Compliance with Global Standards		RoHS	
Ambient Temperature	Operation	0°C to 40°C (non-freezing)	
	Storage	-15°C to 70°C (non-freezing)	
Ambient Humidity	Operation	10%RH to 80%RH (non-condensing)	
	Storage	10%RH to 90%RH (non-condensing)	
Recommended Ambience		Indoor (no direct sunlight); No corrosive gas, inflammable gas, oil mist or dust.	

❶Measurement is taken at ambient temperature 25°C. Value depends on the thermal environment. Abbreviations: NC-Natural Cooling.
❷Resistance is measured by DC current with standard 0.5 m cable.
❸Inductance is measured by current frequency of 1 kHz.
The contents of datasheet are subject to change without prior notice.

■Dimension

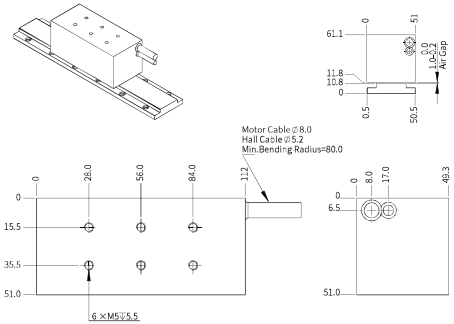

■Force-Speed Curve

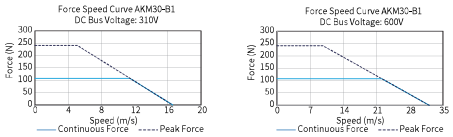

AKM30-B2

AKM30-B2			
Performance Parameters	**Symbol**	**Unit**	**Series**
Continuous Force (NC) @100°C❶	F_{cn}	N	216.8
Peak Force	F_{pk}	N	483.2
Force Constant ±10%	K_f	N/Arms	45.9
Back EMF Constant ±10%	K_e	Vpeak/(m/s)	37.5
Motor Constant @25°C	K_m	N/Sqrt(W)	25.0
Resistance (l-l) 25°C ±10%❷	R_{25}	Ω	2.2
Inductance (L-L) ±30%❸	L	mH	42.0
Electrical Time Constant	τ_e	ms	18.8
Continuous Current (NC) @100°C❶	I_{cn}	Arms	4.8
Peak Current	I_{pk}	Arms	14.4
Continuous Power Dissipation (NC) @100°C❶	P_{cn}	W	99.8
Max. Coil Temperature	t_{max}	°C	100
Thermal Dissipation Constant (NC)❶	K_{thn}	W/°C	1.3
Max. Bus Voltage	U_{bus}	Vdc	600
Magnetic Period	τ_{NN}	mm	42
Attraction Force	F_a	kN	0.8
Mechanical Parameters			
Coil Mass (NC)	m_{cn}	kg	2.7
Coil Length (NC)	L_{cn}	mm	196
Track Mass Per Meter	m_{track}	kg	2.6
Other Information			
Insulation Class		Class B (130°C)	
Protection Grade		IP00	
Compliance with Global Standards		RoHS	
Ambient Temperature	Operation	0°C to 40°C (non-freezing)	
	Storage	-15°C to 70°C (non-freezing)	
Ambient Humidity	Operation	10%RH to 80%RH (non-condensing)	
	Storage	10%RH to 90%RH (non-condensing)	
Recommended Ambience		Indoor (no direct sunlight); No corrosive gas, inflammable gas, oil mist or dust.	

❶Measurement is taken at ambient temperature 25°C. Value depends on the thermal environment. Abbreviations: NC-Natural Cooling.
❷Resistance is measured by DC current with standard 0.5 m cable.
❸Inductance is measured by current frequency of 1 kHz.
The contents of datasheet are subject to change without prior notice.

■Dimension

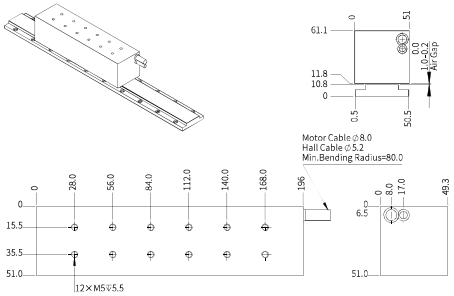

■Force-Speed Curve

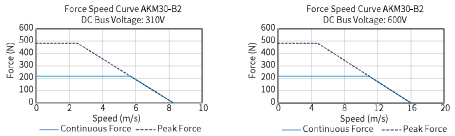

AKM30-B4

AKM30-B4			
Performance Parameters	**Symbol**	**Unit**	**Parallel**
Continuous Force (NC) @100°C❶	F_{cn}	N	433.6
Peak Force	F_{pk}	N	966.3
Force Constant ±10%	K_f	N/Arms	45.9
Back EMF Constant ±10%	K_e	Vpeak/(m/s)	37.5
Motor Constant @25°C	K_m	N/Sqrt(W)	35.4
Resistance (L-L) 25°C ±10%❷	R_{25}	Ω	1.1
Inductance (L-L) ±30%❸	L	mH	21.0
Electrical Time Constant	τ_e	ms	18.8
Continuous Current (NC) @100°C❶	I_{cn}	Arms	9.6
Peak Current	I_{pk}	Arms	28.8
Continuous Power Dissipation (NC) @100°C❶	P_{cn}	W	199.5
Max. Coil Temperature	t_{max}	°C	100
Thermal Dissipation Constant (NC)❶	K_{thn}	W/°C	2.7
Max. Bus Voltage	U_{bus}	Vdc	600
Magnetic Period	τ_{NN}	mm	42
Attraction Force	F_a	kN	1.6
Mechanical Parameters			
Coil Mass (NC)	m_{cn}	kg	5.3
Coil Length (NC)	L_{cn}	mm	364
Track Mass Per Meter	m_{track}	kg	2.6
Other Information			
Insulation Class		Class B (130°C)	
Protection Grade		IP00	
Compliance with Global Standards		RoHS	
Ambient Temperature	Operation	0°C to 40°C (non-freezing)	
	Storage	-15°C to 70°C (non-freezing)	
Ambient Humidity	Operation	10%RH to 80%RH (non-condensing)	
	Storage	10%RH to 90%RH (non-condensing)	
Recommended Ambience		Indoor (no direct sunlight); No corrosive gas, inflammable gas, oil mist or dust.	

❶Measurement is taken at ambient temperature 25°C. Value depends on the thermal environment. Abbreviations: NC-Natural Cooling.
❷Resistance is measured by DC current with standard 0.5 m cable.
❸Inductance is measured by current frequency of 1 kHz.
The contents of datasheet are subject to change without prior notice.

■Dimension

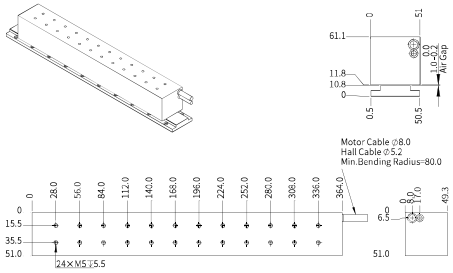

■Force-Speed Curve

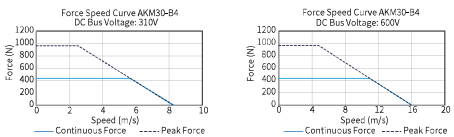

AKM30 Track

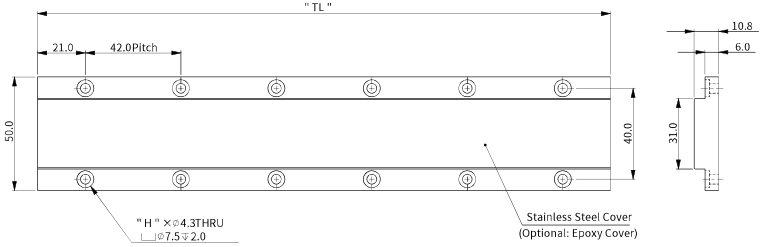

Magnet Track P / N:	Track Length "TL"	No.of Holes "H"
AKM30-TL168-S	168.0	8
AKM30-TL252-S	252.0	12
AKM30-TL420-S	420.0	20

For epoxy cover option, change " -S " to " -E ". (e.g. AKM30-TL168-E)

Part Numbering

Motor Coil

AKM30-B2-J-NH-0.5-NFB

Model:
AKM30

Size:
B1 / B2 / B4

Thermal Sensor:
J=Thermostat(standard) / K=PT100(RTD)
(Contact us for other thermal sensor)

Motor Cable Option:
NFB[3] / FB[4]

Cable Length (m):
0.5 / 3.0
(Contact us for other lengths)

Hall Cable Option:
NH[1] / HF[2]

1. NH = Without Built-in Hall Sensor but with Thermal Sensor
2. HF = With Built-in hall sensor & hall cable comes with flying leads (Standard)
3. NFB = No ferrite bead
4. FB = Ferrite bead

Motor Track

AKM30-TL420-S

Model:
AKM30

Track Length:
TL168 / TL252 / TL420

Cover Type:
S[5] / E[6]

5. S=Stainless steel cover
6. E=Epoxy cover

AKM50-B1

AKM50-B1			
Performance Parameters	**Symbol**	**Unit**	**Series**
Continuous Force (NC) @100°C[1]	F_{cn}	N	180.7
Continuous Force (WC) @100°C[1]	F_{cw}	N	-
Peak Force	F_{pk}	N	402.6
Force Constant ±10%	K_f	N/Arms	38.3
Back EMF Constant ±10%	K_e	Vpeak/(m/s)	31.2
Motor Constant @25°C	K_m	N/Sqrt(W)	26.4
Resistance (L-L) 25°C ±10%[2]	R_{25}	Ω	1.4
Inductance (L-L) ±30%[3]	L	mH	31.8
Electrical Time Constant	T_e	ms	22.7
Continuous Current (NC) @100°C[1]	I_{cn}	Arms	4.8
Continuous Current (WC) @100°C[1]	I_{cw}	Arms	-
Peak Current	I_{pk}	Arms	14.4
Continuous Power Dissipation (NC) @100°C[1]	P_{cn}	W	62.4
Continuous Power Dissipation (WC) @100°C[1]	P_{cw}	W	-
Max. Coil Temperature	t_{max}	°C	100
Thermal Dissipation Constant (NC)[1]	K_{tnn}	W/°C	0.8
Thermal Dissipation Constant (WC)[1]	K_{tnw}	W/°C	-
Max. Bus Voltage	U_{bus}	Vdc	600
Magnetic Period	τ_{N}	mm	42.0
Attraction Force	F_a	kN	0.7
Mechanical Parameters			
Coil Mass (NC)	m_{cn}	kg	2.2
Coil Mass (WC)	m_{cw}	kg	-
Coil Length (NC)	L_{cn}	mm	112
Coil Length (WC)	L_{cw}	mm	-
Track Mass Per Meter	m_{track}	kg	4.8
Other Information			
Insulation Class		Class B (130°C)	
Protection Grade		IP00	
Compliance with Global Standards		RoHS	
Ambient Temperature	Operation	0°C to 40°C (non-freezing)	
	Storage	-15°C to 70°C (non-freezing)	
Ambient Humidity	Operation	10%RH to 80%RH (non-condensing)	
	Storage	10%RH to 90%RH (non-condensing)	
Recommended Ambience		Indoor (no direct sunlight); No corrosive gas, inflammable gas, oil mist or dust.	

1. Measurement is taken at ambient temperature 25°C. Value depends on the thermal environment. Abbreviations: NC-Natural Cooling ,WC-Water Cooling.
2. Resistance is measured by DC current with standard 0.5 m cable.
3. Inductance is measured by current frequency of 1 kHz.

The contents of datasheet are subject to change without prior notice.

Dimension

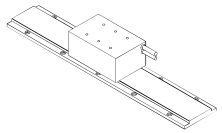

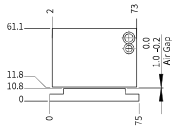

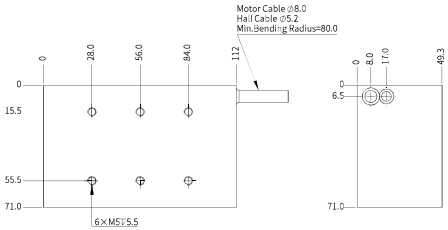

Force-Speed Curve

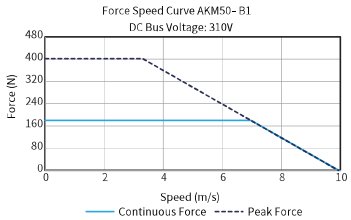

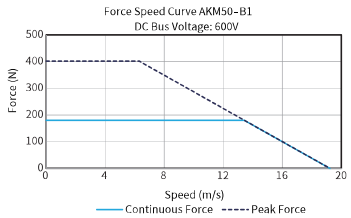

AKM50-B2

AKM50-B2				
Performance Parameters		**Symbol**	**Unit**	**Series**
Continuous Force (NC) @100°C[1]		F_{cn}	N	361.3
Continuous Force (WC) @100°C[1]		F_{cw}	N	579.6
Peak Force		F_{pk}	N	805.3
Force Constant ±10%		K_f	N/Arms	76.5
Back EMF Constant ±10%		K_e	Vpeak/(m/s)	62.5
Motor Constant @25°C		K_m	N/Sqrt(W)	37.3
Resistance (L-L) 25°C ±10%[2]		R_{25}	Ω	2.8
Inductance (L-L) ±30%[3]		L	mH	63.6
Electrical Time Constant		τ_e	ms	22.7
Continuous Current (NC) @100°C[1]		I_{cn}	Arms	4.8
Continuous Current (WC) @100°C[1]		I_{cw}	Arms	8.2
Peak Current		I_{pk}	Arms	14.4
Continuous Power Dissipation (NC) @100°C[1]		P_{cn}	W	124.7
Continuous Power Dissipation (WC) @100°C[1]		P_{cw}	W	364.0
Max. Coil Temperature		t_{max}	°C	100
Thermal Dissipation Constant (NC)[1]		K_{thn}	W/°C	1.7
Thermal Dissipation Constant (WC)[1]		K_{thw}	W/°C	4.9
Max. Bus Voltage		U_{bus}	Vdc	600
Magnetic Period		τ_{NN}	mm	42.0
Attraction Force		F_a	kN	1.3
Mechanical Parameters				
Coil Mass (NC)		m_{cn}	kg	4.1
Coil Mass (WC)		m_{cw}	kg	4.9
Coil Length (NC)		L_{cn}	mm	196
Coil Length (WC)		L_{cw}	mm	234
Track Mass Per Meter		m_{track}	kg	4.8
Other Information				
Insulation Class		Class B (130°C)		
Protection Grade		IP00		
Compliance with Global Standards		RoHS		
Ambient Temperature	Operation	0°C to 40°C (non-freezing)		
	Storage	-15°C to 70°C (non-freezing)		
Ambient Humidity	Operation	10%RH to 80%RH (non-condensing)		
	Storage	10%RH to 90%RH (non-condensing)		
Recommended Ambience		Indoor (no direct sunlight); No corrosive gas, inflammable gas, oil mist or dust.		

1. Measurement is taken at ambient temperature 25°C. Value depends on the thermal environment. Abbreviations: NC-Natural Cooling ,WC-Water Cooling.
2. Resistance is measured by DC current with standard 0.5 m cable.
3. Inductance is measured by current frequency of 1 kHz.

The contents of datasheet are subject to change without prior notice.

Dimension

AKM50-B2

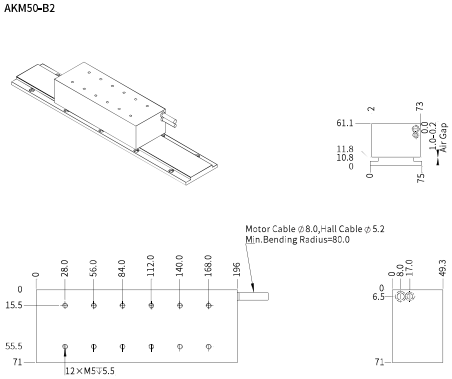

AKM50-W-B2

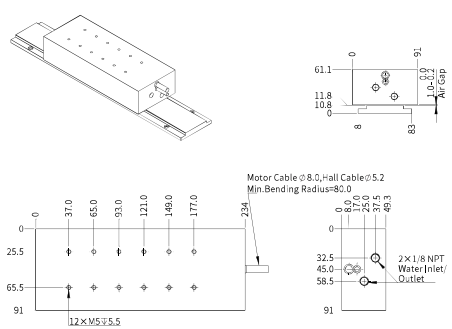

Force-Speed Curve

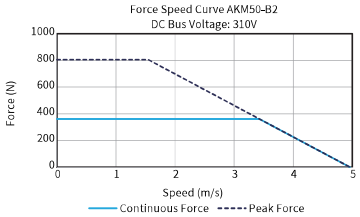

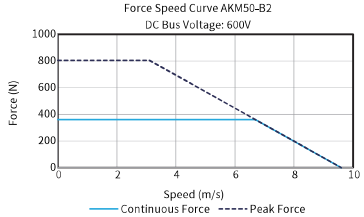

AKM50-B4

AKM50-B4				
Performance Parameters		**Symbol**	**Unit**	**Parallel**
Continuous Force (NC) @100°C[1]		F_{cn}	N	722.6
Continuous Force (WC) @100°C[1]		F_{cw}	N	1159.3
Peak Force		F_{pk}	N	1610.5
Force Constant ±10%		K_f	N/Arms	76.5
Back EMF Constant ±10%		K_e	Vpeak/(m/s)	62.5
Motor Constant @25°C		K_m	N/Sqrt(W)	52.8
Resistance (L-L) 25°C ±10%[2]		R_{25}	Ω	1.4
Inductance (L-L) ±30%[3]		L	mH	31.8
Electrical Time Constant		τ_e	ms	22.7
Continuous Current (NC) @100°C[1]		I_{cn}	Arms	9.6
Continuous Current (WC) @100°C[1]		I_{cw}	Arms	16.4
Peak Current		I_{pk}	Arms	28.8
Continuous Power Dissipation (NC) @100°C[1]		P_{cn}	W	249.4
Continuous Power Dissipation (WC) @100°C[1]		P_{cw}	W	727.9
Max. Coil Temperature		t_{max}	°C	100
Thermal Dissipation Constant (NC)[1]		K_{thn}	W/°C	3.3
Thermal Dissipation Constant (WC)[1]		K_{thw}	W/°C	9.7
Max. Bus Voltage		U_{bus}	Vdc	600
Magnetic Period		τ_{NN}	mm	42.0
Attraction Force		F_a	kN	2.7
Mechanical Parameters				
Coil Mass (NC)		m_{cn}	kg	7.9
Coil Mass (WC)		m_{cw}	kg	9.1
Coil Length (NC)		L_{cn}	mm	364
Coil Length (WC)		L_{cw}	mm	402
Track Mass Per Meter		m_{track}	kg	4.8
Other Information				
Insulation Class		Class B (130°C)		
Protection Grade		IP00		
Compliance with Global Standards		RoHS		
Ambient Temperature	Operation	0°C to 40°C (non-freezing)		
	Storage	-15°C to 70°C (non-freezing)		
Ambient Humidity	Operation	10%RH to 80%RH (non-condensing)		
	Storage	10%RH to 90%RH (non-condensing)		
Recommended Ambience		Indoor (no direct sunlight); No corrosive gas, inflammable gas, oil mist or dust.		

1. Measurement is taken at ambient temperature 25°C. Value depends on the thermal environment. Abbreviations: NC-Natural Cooling ,WC-Water Cooling.
2. Resistance is measured by DC current with standard 0.5 m cable.
3. Inductance is measured by current frequency of 1 kHz.

The contents of datasheet are subject to change without prior notice.

Dimension

AKM50-B4

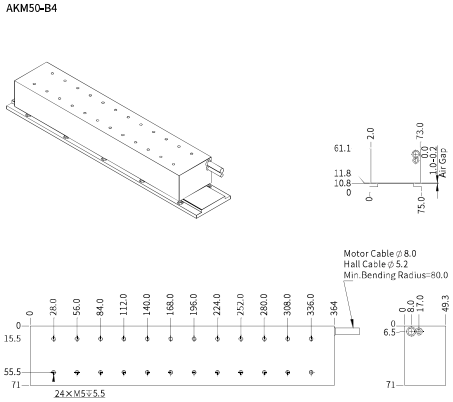

AKM50-W-B4

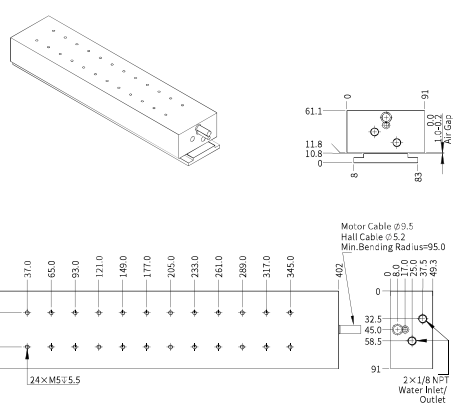

Force-Speed Curve

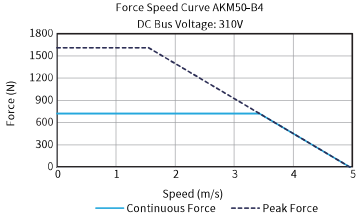

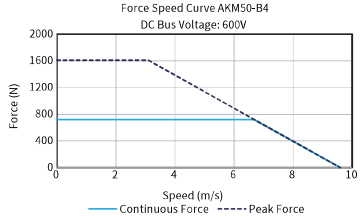

AKM50 Track

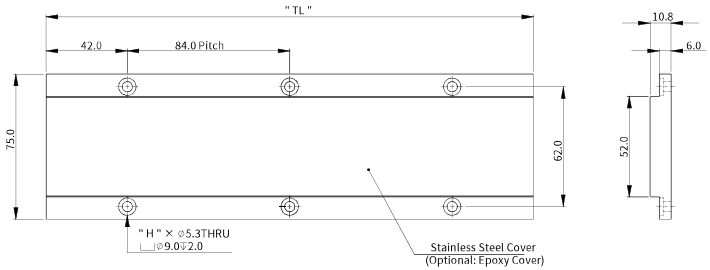

Magnet Track P / N:	Track Length "TL"	No.of Holes "H"
AKM50-TL168-S	168.0	4
AKM50-TL252-S	252.0	6
AKM50-TL420-S	420.0	10

For epoxy cover option, change "-S" to "-E". (e.g. AKM50-TL168-E)

Part Numbering

Motor Coil

AKM50-W-B2-J-NH-0.5-NFB

Model: AKM50

Cooling Option: Blank=Natural Cooling; W=Water Cooling

Size: B1 / B2 / B4

Thermal Sensor: J=Thermostat(standard) / K=PT100(RTD) (Contact us for other thermal sensor)

Motor Cable Option: NFB[3] / FB[4]

Cable Length (m): 0.5 / 3.0 (Contact us for other lengths)

Hall Cable Option: NH[1] / HF[2]

1. NH = Without Built-in Hall Sensor but with Thermal Sensor
2. HF = With Built-in hall sensor & hall cable comes with flying leads (Standard)
3. NFB = No ferrite bead
4. FB = Ferrite bead

Motor Track

AKM50-TL420-S

Model: AKM50

Track Length: TL168 / TL252 / TL420

Cover Type: S[1] / E[2]

1. S=Stainless steel cover
2. E=Epoxy cover

AKM100-B1

AKM100-B1				
Performance Parameters		**Symbol**	**Unit**	**Series**
Continuous Force (NC) @100°C[1]		F_{cn}	N	361.3
Continuous Force (WC) @100°C[1]		F_{cw}	N	-
Peak Force		F_{pk}	N	805.3
Force Constant ±10%		K_f	N/Arms	76.5
Back EMF Constant ±10%		K_e	Vpeak/(m/s)	62.5
Motor Constant @25°C		K_m	N/Sqrt(W)	41.2
Resistance (L-L) 25°C ±10%[2]		R_{25}	Ω	2.3
Inductance (L-L) ±30%[3]		L	mH	58.0
Electrical Time Constant		T_e	ms	25.2
Continuous Current (NC) @100°C[1]		I_{cn}	Arms	4.8
Continuous Current (WC) @100°C[1]		I_{cw}	Arms	-
Peak Current		I_{pk}	Arms	14.4
Continuous Power Dissipation (NC) @100°C[1]		P_{cn}	W	102.4
Continuous Power Dissipation (WC) @100°C[1]		P_{cw}	W	-
Max. Coil Temperature		T_{max}	°C	100
Thermal Dissipation Constant (NC)[1]		K_{tnn}	W/°C	1.4
Thermal Dissipation Constant (WC)[1]		K_{tnw}	W/°C	-
Max. Bus Voltage		U_{bus}	Vdc	600
Magnetic Period		τ_{NN}	mm	42
Attraction Force		F_a	kN	1.3
Mechanical Parameters				
Coil Mass (NC)		m_{cn}	kg	4.0
Coil Mass (WC)		m_{cw}	kg	-
Coil Length (NC)		L_{cn}	mm	112
Coil Length (WC)		L_{cw}	mm	-
Track Mass Per Meter		m_{track}	kg	8.6
Other Information				
Insulation Class		Class B (130°C)		
Protection Grade		IP00		
Compliance with Global Standards		RoHS		
Ambient Temperature	Operation	0°C to 40°C (non-freezing)		
	Storage	-15°C to 70°C (non-freezing)		
Ambient Humidity	Operation	10%RH to 80%RH (non-condensing)		
	Storage	10%RH to 90%RH (non-condensing)		
Recommended Ambience		Indoor (no direct sunlight); No corrosive gas, inflammable gas, oil mist or dust.		

1. Measurement is taken at ambient temperature 25°C. Value depends on the thermal environment. Abbreviations: NC-Natural Cooling, WC-Water Cooling.
2. Resistance is measured by DC current with standard 0.5 m cable.
3. Inductance is measured by current frequency of 1 kHz.

The contents of datasheet are subject to change without prior notice.

Dimension

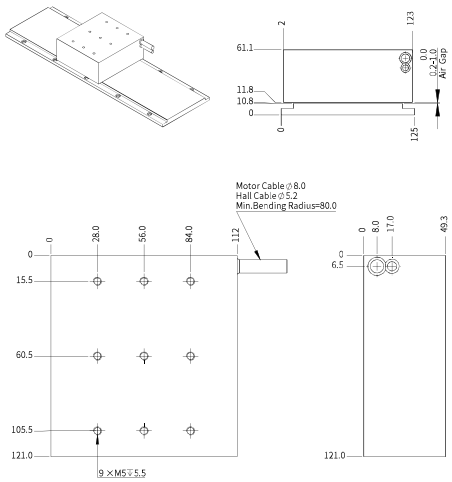

Force-Speed Curve

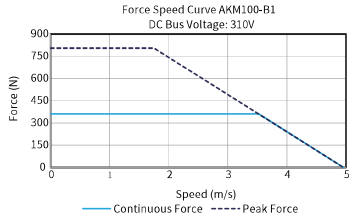

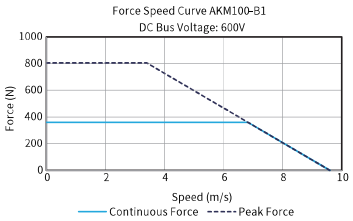

AKM100-B2

AKM100-B2			
Performance Parameters	**Symbol**	**Unit**	**Series**
Continuous Force (NC) @100°C[1]	F_{cn}	N	722.6
Continuous Force (WC) @100°C[1]	F_{cw}	N	1159.3
Peak Force	F_{pk}	N	1610.5
Force Constant ±10%	K_f	N/Arms	153.0
Back EMF Constant ±10%	K_e	Vpeak/(m/s)	124.9
Motor Constant @25°C	K_m	N/Sqrt(W)	58.2
Resistance (L-L) 25°C ±10%[2]	R_{25}	Ω	4.6
Inductance (L-L) ±30%[3]	L	mH	116.0
Electrical Time Constant	τ_e	ms	25.2
Continuous Current (NC) @100°C[1]	I_{cn}	Arms	4.8
Continuous Current (WC) @100°C[1]	I_{cw}	Arms	8.2
Peak Current	I_{pk}	Arms	14.4
Continuous Power Dissipation (NC) @100°C[1]	P_{cn}	W	204.9
Continuous Power Dissipation (WC) @100°C[1]	P_{cw}	W	597.9
Max. Coil Temperature	t_{max}	°C	100
Thermal Dissipation Constant (NC)[1]	K_{thn}	W/°C	2.7
Thermal Dissipation Constant (WC)[1]	K_{thw}	W/°C	8.0
Max. Bus Voltage	U_{bus}	Vdc	600
Magnetic Period	τ_{NN}	mm	42
Attraction Force	F_a	kN	2.7
Mechanical Parameters			
Coil Mass (NC)	m_{cn}	kg	7.0
Coil Mass (WC)	m_{cw}	kg	8.5
Coil Length (NC)	L_{cn}	mm	196
Coil Length (WC)	L_{cw}	mm	236
Track Mass Per Meter	m_{track}	kg	8.6
Other Information			
Insulation Class		Class B (130°C)	
Protection Grade		IP00	
Compliance with Global Standards		RoHS	
Ambient Temperature	Operation	0°C to 40°C (non-freezing)	
	Storage	-15°C to 70°C (non-freezing)	
Ambient Humidity	Operation	10%RH to 80%RH (non-condensing)	
	Storage	10%RH to 90%RH (non-condensing)	
Recommended Ambience		Indoor (no direct sunlight); No corrosive gas, inflammable gas, oil mist or dust.	

1. Measurement is taken at ambient temperature 25°C. Value depends on the thermal environment. Abbreviations: NC-Natural Cooling ,WC-Water Cooling.
2. Resistance is measured by DC current with standard 0.5 m cable.
3. Inductance is measured by current frequency of 1 kHz.

The contents of datasheet are subject to change without prior notice.

Force-Speed Curve

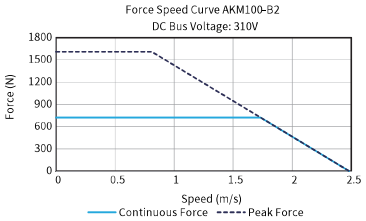

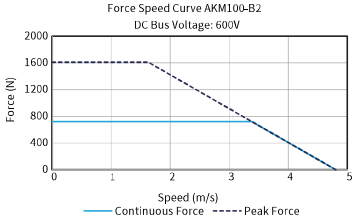

Dimension

AKM100-B2

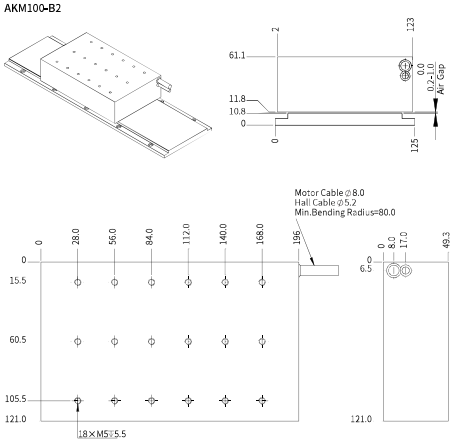

AKM100-W-B2

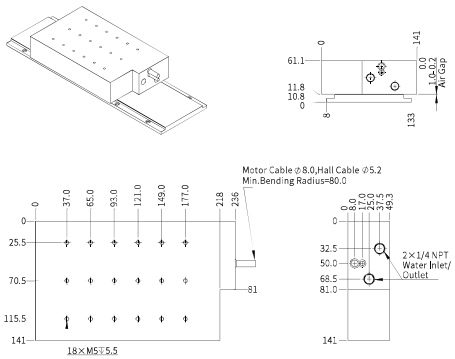

AKM100-B4

AKM100-B4			
Performance Parameters	**Symbol**	**Unit**	**Parallel**
Continuous Force (NC) @100°C[1]	F_{cn}	N	1445.3
Continuous Force (WC) @100°C[1]	F_{cw}	N	1947.3
Peak Force	F_{pk}	N	3221.1
Force Constant ±10%	K_f	N/Arms	153.0
Back EMF Constant ±10%	K_e	Vpeak/(m/s)	124.9
Motor Constant @25°C	K_m	N/Sqrt(W)	82.4
Resistance (L-L) 25°C ±10%[2]	R_{25}	Ω	2.3
Inductance (L-L) ±30%[3]	L	mH	58.0
Electrical Time Constant	τ_e	ms	25.2
Continuous Current (NC) @100°C[1]	I_{cn}	Arms	9.6
Continuous Current (WC) @100°C[1]	I_{cw}	Arms	13.4
Peak Current	I_{pk}	Arms	28.8
Continuous Power Dissipation (NC) @100°C[1]	P_{cn}	W	409.8
Continuous Power Dissipation (WC) @100°C[1]	P_{cw}	W	803.1
Max. Coil Temperature	t_{max}	°C	100
Thermal Dissipation Constant (NC)[1]	K_{thn}	W/°C	5.5
Thermal Dissipation Constant (WC)[1]	K_{thw}	W/°C	10.7
Max. Bus Voltage	U_{bus}	Vdc	600
Magnetic Period	τ_{NN}	mm	42
Attraction Force	F_a	kN	5.4
Mechanical Parameters			
Coil Mass (NC)	m_{cn}	kg	13.5
Coil Mass (WC)	m_{cw}	kg	15.8
Coil Length (NC)	L_{cn}	mm	364
Coil Length (WC)	L_{cw}	mm	404
Track Mass Per Meter	m_{track}	kg	8.6
Other Information			
Insulation Class		Class B (130°C)	
Protection Grade		IP00	
Compliance with Global Standards		RoHS	
Ambient Temperature	Operation	0°C to 40°C (non-freezing)	
	Storage	-15°C to 70°C (non-freezing)	
Ambient Humidity	Operation	10%RH to 80%RH (non-condensing)	
	Storage	10%RH to 90%RH (non-condensing)	
Recommended Ambience		Indoor (no direct sunlight); No corrosive gas, inflammable gas, oil mist or dust.	

1. Measurement is taken at ambient temperature 25°C. Value depends on the thermal environment. Abbreviations: NC-Natural Cooling ,WC-Water Cooling.
2. Resistance is measured by DC current with standard 0.5 m cable.
3. Inductance is measured by current frequency of 1 kHz.

The contents of datasheet are subject to change without prior notice.

Force-Speed Curve

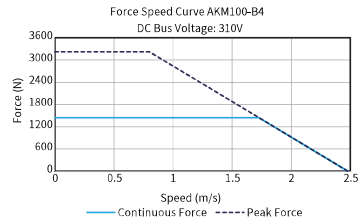

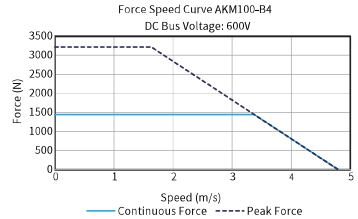

Dimension

AKM100-B4

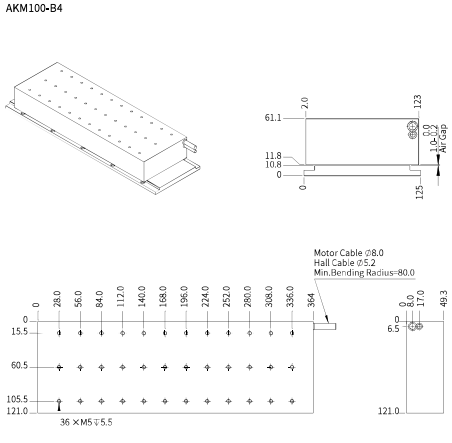

AKM100-W-B4

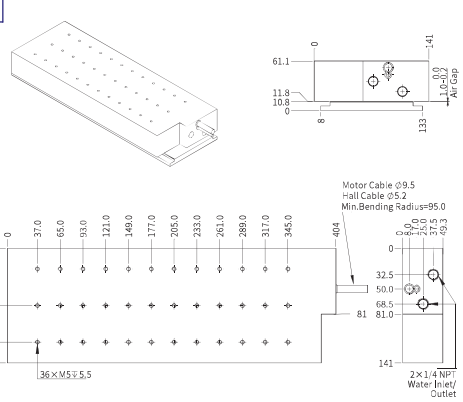

AKM100 Track

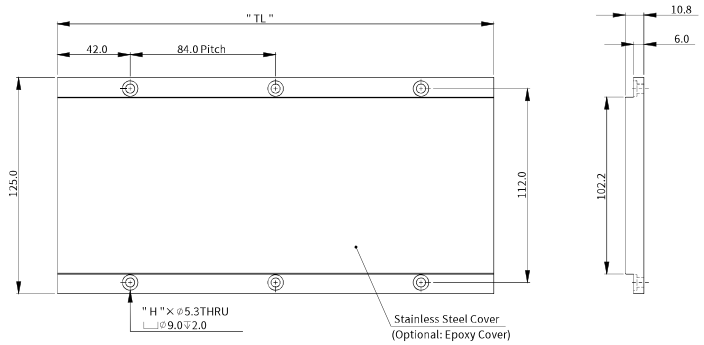

Magnet Track P / N:	Track Length "TL"	No.of Holes "H"
AKM100-TL168-S	168.0	4
AKM100-TL252-S	252.0	6
AKM100-TL420-S	420.0	10

For epoxy cover option, change "-S" to "-E". (e.g. AKM100-TL168-E)

Part Numbering

Motor Coil

AKM100-W-B2-J-NH-0.5-NFB

Model: AKM100

Cooling Option: Blank=Natural Cooling; W=Water Cooling

Size: B1 / B2 / B4

Thermal Sensor: J=Thermostat(standard) / K=PT100(RTD) (Contact us for other thermal sensor)

Hall Cable Option: NH[1] / HF[2]

Cable Length (m): 0.5 / 3.0 (Contact us for other lengths)

Motor Cable Option: NFB[3] / FB[4]

1. NH = Without Built-in Hall Sensor but with Thermal Sensor
2. HF = With Built-in hall sensor & hall cable comes with flying leads (Standard)
3. NFB = No ferrite bead
4. FB = Ferrite bead

Motor Track

AKM100-TL420-S

Model: AKM100

Track Length: TL168 / TL252 / TL420

Cover Type: S[5] / E[6]

5. S=Stainless steel cover
6. E=Epoxy cover

AKM150-B4

AKM150-B4			
Performance Parameters	Symbol	Unit	Parallel
Continuous Force (NC) @100°C[1]	F_{cn}	N	2027.0
Continuous Force (WC) @100°C[1]	F_{cw}	N	2738.4
Peak Force	F_{pk}	N	4831.6
Force Constant ±10%	K_f	N/Arms	229.5
Back EMF Constant ±10%	K_e	Vpeak/(m/s)	187.4
Motor Constant @25°C	K_m	N/Sqrt(W)	104.8
Resistance (L-L) 25°C ±10%[2]	R_{25}	Ω	3.2
Inductance (L-L) ±30%[3]	L	mH	80.5
Electrical Time Constant	T_e	ms	25.2
Continuous Current (NC) @100°C[1]	I_{cn}	Arms	9.0
Continuous Current (WC) @100°C[1]	I_{cw}	Arms	12.6
Peak Current	I_{pk}	Arms	28.8
Continuous Power Dissipation (NC) @100°C[1]	P_{cn}	W	498.4
Continuous Power Dissipation (WC) @100°C[1]	P_{cw}	W	982.1
Max. Coil Temperature	t_{max}	°C	100
Thermal Dissipation Constant (NC)[1]	K_{thn}	W/°C	6.6
Thermal Dissipation Constant (WC)[1]	K_{thw}	W/°C	13.1
Max. Bus Voltage	U_{bus}	Vdc	600
Magnetic Period	τ_{MN}	mm	42
Attraction Force	F_a	kN	8.0
Mechanical Parameters			
Coil Mass (NC)	m_{cn}	kg	20.2
Coil Mass (WC)	m_{cw}	kg	22.3
Coil Length (NC)	L_{cn}	mm	364
Coil Length (WC)	L_{cw}	mm	404
Track Mass Per Meter	m_{track}	kg	15.2
Other Information			
Insulation Class		Class B (130°C)	
Protection Grade		IP00	
Compliance with Global Standards		RoHS	
Ambient Temperature	Operation	0°C to 40°C (non-freezing)	
	Storage	-15°C to 70°C (non-freezing)	
Ambient Humidity	Operation	10%RH to 80%RH (non-condensing)	
	Storage	10%RH to 90%RH (non-condensing)	
Recommended Ambience		Indoor (no direct sunlight); No corrosive gas, inflammable gas, oil mist or dust.	

1. Measurement is taken at ambient temperature 25°C. Value depends on the thermal environment. Abbreviations: NC-Natural Cooling, WC-Water Cooling.
2. Resistance is measured by DC current with standard 0.5 m cable.
3. Inductance is measured by current frequency of 1 kHz.

The contents of datasheet are subject to change without prior notice.

Force-Speed Curve

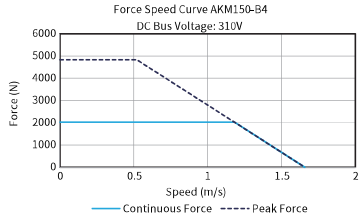

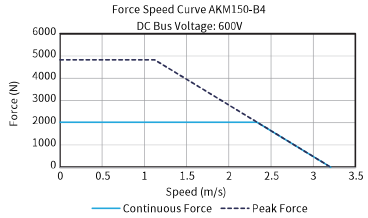

Dimension

AKM150-B4

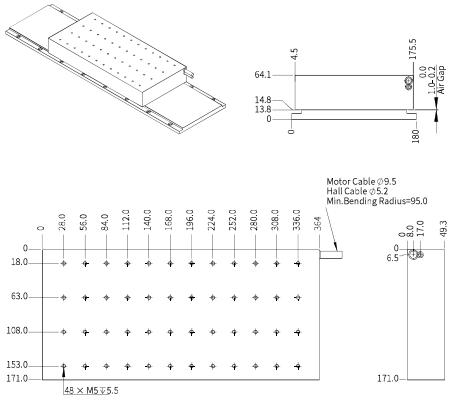

AKM150-W-B4

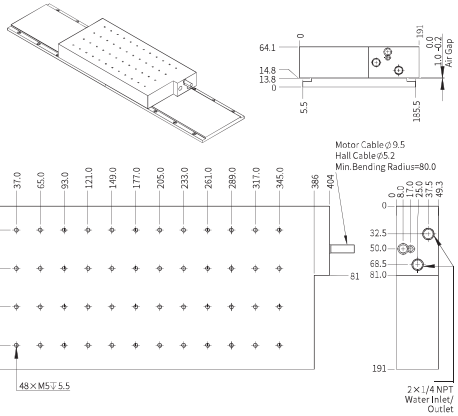

AKM150-B8

AKM150-B8			
Performance Parameters	**Symbol**	**Unit**	**Parallel**
Continuous Force (NC) @100°C[1]	F_{cn}	N	3839.1
Continuous Force (WC) @100°C[1]	F_{cw}	N	5216.1
Peak Force	F_{pk}	N	9663.2
Force Constant ±10%	K_f	N/Arms	229.5
Back EMF Constant ±10%	K_e	Vpeak/(m/s)	187.4
Motor Constant @25°C	K_m	N/Sqrt(W)	148.1
Resistance (L-L) 25°C ±10%[2]	R_{25}	Ω	1.6
Inductance (L-L) ±30%[3]	L	mH	40.3
Electrical Time Constant	τ_e	ms	25.2
Continuous Current (NC) @100°C[1]	I_{cn}	Arms	17.0
Continuous Current (WC) @100°C[1]	I_{cw}	Arms	24.0
Peak Current	I_{pk}	Arms	57.6
Continuous Power Dissipation (NC) @100°C[1]	P_{cn}	W	893.9
Continuous Power Dissipation (WC) @100°C[1]	P_{cw}	W	1781.6
Max. Coil Temperature	t_{max}	°C	100
Thermal Dissipation Constant (NC)[1]	K_{thn}	W/°C	11.9
Thermal Dissipation Constant (WC)[1]	K_{thw}	W/°C	23.8
Max. Bus Voltage	U_{bus}	Vdc	600
Magnetic Period	τ_{NN}	mm	42
Attraction Force	F_a	kN	16.0
Mechanical Parameters			
Coil Mass (NC)	m_{cn}	kg	39.4
Coil Mass (WC)	m_{cw}	kg	42.9
Coil Length (NC)	L_{cn}	mm	700
Coil Length (WC)	L_{cw}	mm	786
Track Mass Per Meter	m_{track}	kg	15.2
Other Information			
Insulation Class		Class B (130°C)	
Protection Grade		IP00	
Compliance with Global Standards		RoHS	
Ambient Temperature	Operation	0°C to 40°C (non-freezing)	
	Storage	-15°C to 70°C (non-freezing)	
Ambient Humidity	Operation	10%RH to 80%RH (non-condensing)	
	Storage	10%RH to 90%RH (non-condensing)	
Recommended Ambience		Indoor (no direct sunlight); No corrosive gas, inflammable gas, oil mist or dust.	

1. Measurement is taken at ambient temperature 25°C. Value depends on the thermal environment. Abbreviations: NC-Natural Cooling ,WC-Water Cooling.
2. Resistance is measured by DC current with standard 0.5 m cable.
3. Inductance is measured by current frequency of 1 kHz.

The contents of datasheet are subject to change without prior notice.

■ Dimension

AKM150-B8

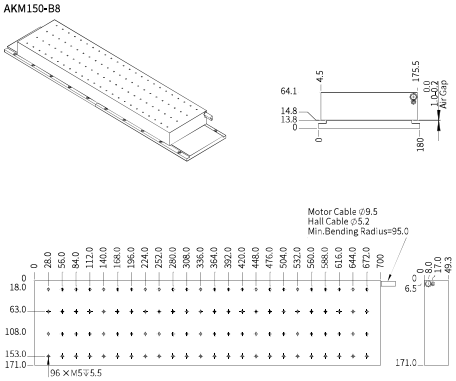

AKM150-W-B8

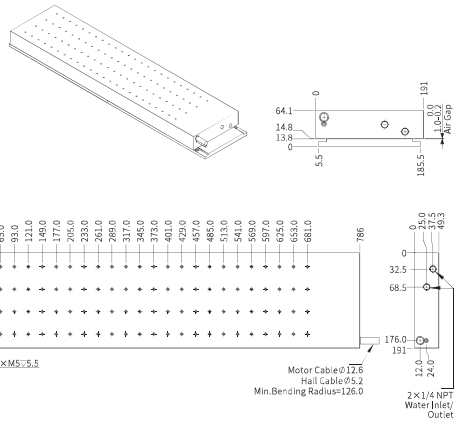

■ Force-Speed Curve

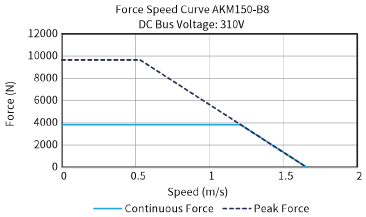

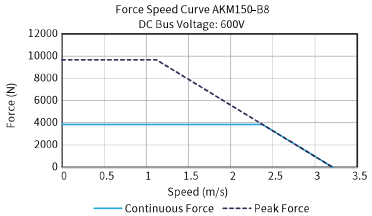

AKM150 Track

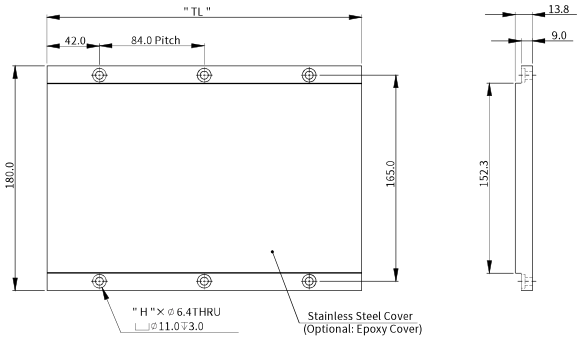

Magnet Track P / N:	Track Length "TL"	No.of Holes "H"
AKM150-TL168-S	168.0	4
AKM150-TL252-S	252.0	6
AKM150-TL420-S	420.0	10

For epoxy cover option, change"-S" to "-E". (e.g. AKM150-TL168-E)

Part Numbering

Motor Coil

AKM150-W-B4-J-NH-0.5-NFB

- Model: AKM150
- Cooling Option: Blank=Natural Cooling; W=Water Cooling
- Size: B4 / B8
- Thermal Sensor: J=Thermostat(standard) / K=PT100(RTD) (Contact us for other thermal sensor)
- Motor Cable Option: NFB[3] / FB[4]
- Cable Length (m): 0.5 / 3.0 (Contact us for other lengths)
- Hall Cable Option: NH[1] / HF[2]

1. NH = Without Built-in Hall Sensor but with Thermal Sensor
2. HF = With Built-in hall sensor & hall cable comes with flying leads (Standard)
3. NFB = No ferrite bead
4. FB = Ferrite bead

Motor Track

AKM150-TL420-S

- Model: AKM150
- Track Length: TL168 / TL252 / TL420
- Cover Type: S[5] / E[6]

5. S=Stainless steel cover
6. E=Epoxy cover

AKM200-B4

AKM200-B4			
Performance Parameters	**Symbol**	**Unit**	**Parallel**
Continuous Force (NC) @100°C[1]	F_{cn}	N	2539.6
Continuous Force (WC) @100°C[1]	F_{cw}	N	3249.8
Peak Force	F_{pk}	N	6442.2
Force Constant ±10%	K_f	N/Arms	306.0
Back EMF Constant ±10%	K_e	Vpeak/(m/s)	249.8
Motor Constant @25°C	K_m	N/Sqrt(W)	124.9
Resistance (L-L) 25°C ±10%[2]	R_{25}	Ω	4.0
Inductance (L-L) ±30%[3]	L	mH	103.0
Electrical Time Constant	τ_e	ms	25.8
Continuous Current (NC) @100°C[1]	I_{cn}	Arms	8.4
Continuous Current (WC) @100°C[1]	I_{cw}	Arms	10.8
Peak Current	I_{pk}	Arms	28.8
Continuous Power Dissipation (NC) @100°C[1]	P_{cn}	W	545.6
Continuous Power Dissipation (WC) @100°C[1]	P_{cw}	W	904.4
Max. Coil Temperature	t_{max}	°C	100
Thermal Dissipation Constant (NC)[1]	K_{thn}	W/°C	7.3
Thermal Dissipation Constant (WC)[1]	K_{thw}	W/°C	12.1
Max. Bus Voltage	U_{bus}	Vdc	600
Magnetic Period	τ_{NN}	mm	42
Attraction Force	F_a	kN	10.7
Mechanical Parameters			
Coil Mass (NC)	m_{cn}	kg	26.5
Coil Mass (WC)	m_{cw}	kg	29.0
Coil Length (NC)	L_{cn}	mm	364
Coil Length (WC)	L_{cw}	mm	404
Track Mass Per Meter	m_{track}	kg	22.4
Other Information			
Insulation Class		Class B (130°C)	
Protection Grade		IP00	
Compliance with Global Standards		RoHS	
Ambient Temperature	Operation	0°C to 40°C (non-freezing)	
	Storage	-15°C to 70°C (non-freezing)	
Ambient Humidity	Operation	10%RH to 80%RH (non-condensing)	
	Storage	10%RH to 90%RH (non-condensing)	
Recommended Ambience		Indoor (no direct sunlight); No corrosive gas, inflammable gas, oil mist or dust.	

1. Measurement is taken at ambient temperature 25°C. Value depends on the thermal environment. Abbreviations: NC-Natural Cooling ,WC-Water Cooling.
2. Resistance is measured by DC current with standard 0.5 m cable.
3. Inductance is measured by current frequency of 1 kHz.

The contents of datasheet are subject to change without prior notice.

Dimension

AKM200-B4

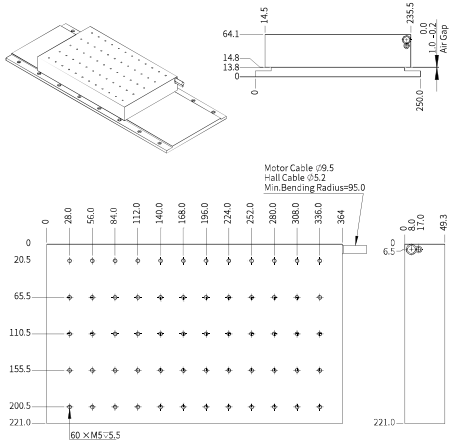

AKM200-W-B4

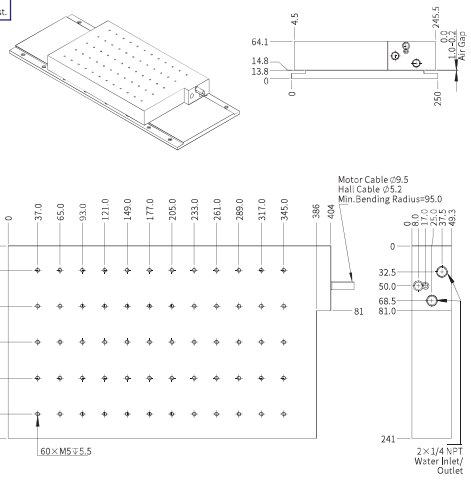

Force-Speed Curve

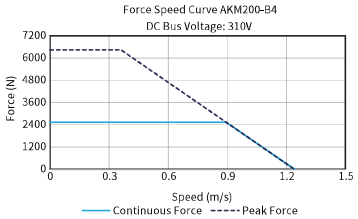

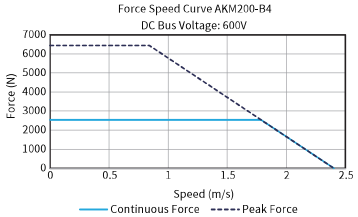

AKM200-B8

AKM200-B8			
Performance Parameters	**Symbol**	**Unit**	**Parallel**
Continuous Force (NC) @100°C[1]	F_{cn}	N	4817.7
Continuous Force (WC) @100°C[1]	F_{cw}	N	6190.1
Peak Force	F_{pk}	N	12884.3
Force Constant ±10%	K_f	N/Arms	306.0
Back EMF Constant ±10%	K_e	Vpeak/(m/s)	249.8
Motor Constant @25°C	K_m	N/Sqrt(W)	176.7
Resistance (L-L) 25°C ±10%[2]	R_{25}	Ω	2.0
Inductance (L-L) ±30%[3]	L	mH	51.5
Electrical Time Constant	τ_e	ms	25.8
Continuous Current (NC) @100°C[1]	I_{cn}	Arms	16.0
Continuous Current (WC) @100°C[1]	I_{cw}	Arms	20.6
Peak Current	I_{pk}	Arms	57.6
Continuous Power Dissipation (NC) @100°C[1]	P_{cn}	W	989.8
Continuous Power Dissipation (WC) @100°C[1]	P_{cw}	W	1640.7
Max. Coil Temperature	t_{max}	°C	100
Thermal Dissipation Constant (NC)[1]	K_{thn}	W/°C	13.2
Thermal Dissipation Constant (WC)[1]	K_{thw}	W/°C	21.9
Max. Bus Voltage	U_{bus}	Vdc	600
Magnetic Period	τ_{NN}	mm	42
Attraction Force	F_a	kN	21.4
Mechanical Parameters			
Coil Mass (NC)	m_{cn}	kg	51.6
Coil Mass (WC)	m_{cw}	kg	55.8
Coil Length (NC)	L_{cn}	mm	700
Coil Length (WC)	L_{cw}	mm	786
Track Mass Per Meter	m_{track}	kg	22.4
Other Information			
Insulation Class		Class B (130°C)	
Protection Grade		IP00	
Compliance with Global Standards		RoHS	
Ambient Temperature	Operation	0°C to 40°C (non-freezing)	
	Storage	-15°C to 70°C (non-freezing)	
Ambient Humidity	Operation	10%RH to 80%RH (non-condensing)	
	Storage	10%RH to 90%RH (non-condensing)	
Recommended Ambience		Indoor (no direct sunlight); No corrosive gas, inflammable gas, oil mist or dust.	

1. Measurement is taken at ambient temperature 25°C. Value depends on the thermal environment. Abbreviations: NC-Natural Cooling ,WC-Water Cooling.
2. Resistance is measured by DC current with standard 0.5 m cable.
3. Inductance is measured by current frequency of 1 kHz.

The contents of datasheet are subject to change without prior notice.

Dimension

AKM200-B8

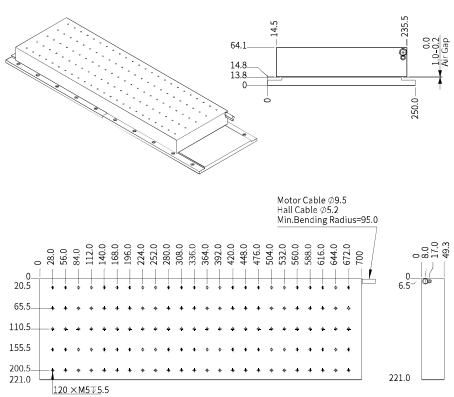

AKM200-W-B8

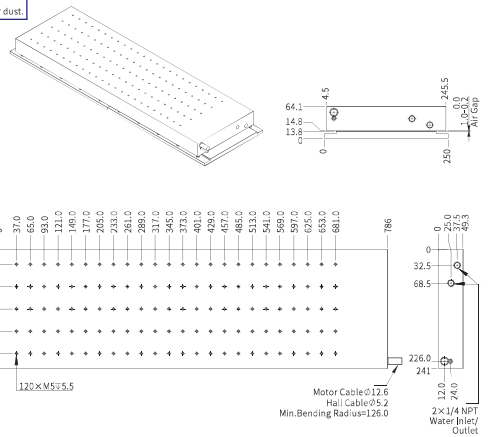

Force-Speed Curve

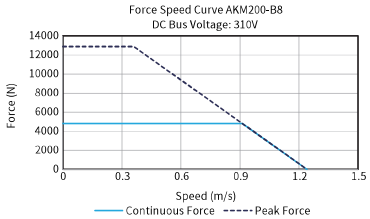

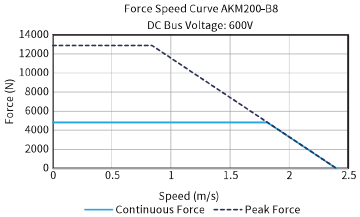

AKM200 Track

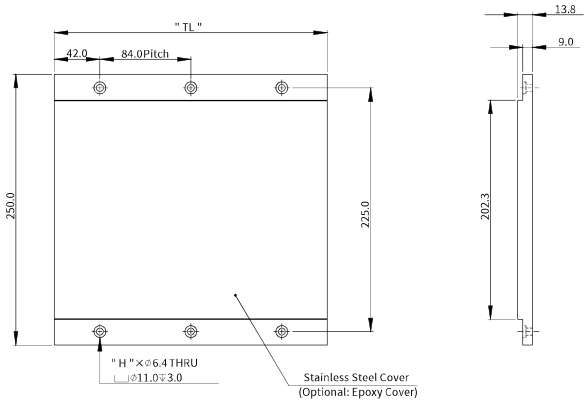

Magnet Track P / N:	Track Length "TL"	No.of Holes "H"
AKM200-TL168-S	168.0	4
AKM200-TL252-S	252.0	6
AKM200-TL420-S	420.0	10

For epoxy cover option, change "-S" to "-E". (e.g. AKM200-TL168-E)

Part Numbering

Motor Coil

AKM200-W-B8-J-NH-0.5-NFB

Model: AKM200

Cooling Option: Blank=Natural Cooling; W=Water Cooling

Size: B4 / B8

Thermal Sensor: J=Thermostat(standard) / K=PT100(RTD) (Contact us for other thermal sensor)

Motor Cable Option: NFB / FB

Cable Length (m): 0.5 / 3.0 (Contact us for other lengths)

Hall Cable Option: NH / HF

1. NH = Without Built-in Hall Sensor but with Thermal Sensor
2. HF = With Built-in hall sensor & hall cable comes with flying leads (Standard)
3. NFB = No ferrite bead
4. FB = Ferrite bead

Motor Track

AKM200-TL420-S

Model: AKM200

Track Length: TL168 / TL252 / TL420

Cover Type: S / E

1. S=Stainless steel cover
2. E=Epoxy cover

Motor Cable Connection

MOTOR CABLE

PIN	DESCRIPTION	COLOR
-	M1	BLACK 1
-	M2	BLACK 2
-	M3	BLACK 3
-	PE	YELLOW / GREEN

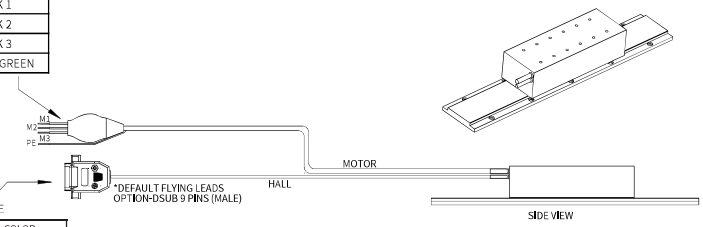

HALL CABLE
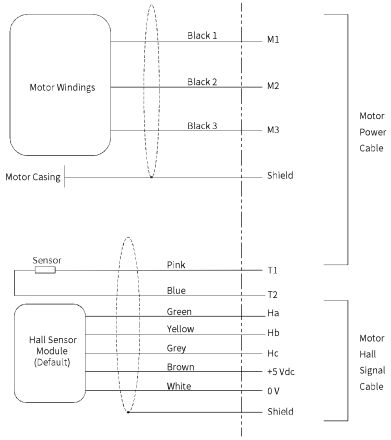
PIN	DESCRIPTION	COLOR
1	HA	GREEN
2	HB	YELLOW
3	HC	GREY
4	5VDC	BROWN
5	0VDC	WHITE
6	T1	PINK
7	T2	BLUE